NTN BEARING CORP.OF AMERICA

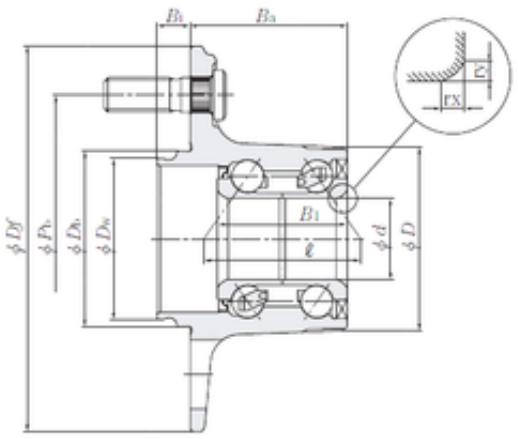

HUB199-13 Bearing 2D drawings and 3D CAD models

NTN HUB199-13 angular contact ball bearings

Bearing No. HUB199-13

Bore Diameter	30 mm
Outer Diameter	67 mm
d	30 mm
D	67 mm
rx	3,5 mm
ry	2,5 mm
Ba	71 mm
Db	64 mm
Df	152 mm
Pb	114,3 mm
Bi	12,5 mm
B1	59 mm
Dw	64 mm
ℓ	69,4 Tolerance h14
Weight	2,14 Kg
Basic dynamic load rating (C)	29,5 kN
Basic static load rating (C0)	20,2 kN